Submittal

Single Packaged
14 SEER Heat Pumps

4WHC4024A1000B

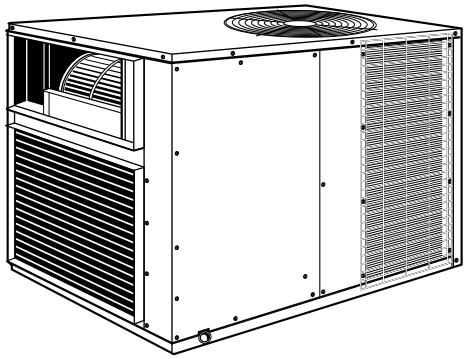

Note: *"Graphics in this document are for representation only. Actual model may differ in appearance."*

June 2020

4WHC4024A-SUB-1D-EN

SAFETY SECTION

Important — This document contains a wiring diagram, a parts list, and service information. This is customer property and is to remain with this unit. Please return to service information pack upon completion of work.

⚠ WARNING

HAZARDOUS VOLTAGE!

Failure to follow this Warning could result in property damage, severe personal injury, or death.

Disconnect all electric power, including remote disconnects before servicing. Follow proper lockout/tagout procedures to ensure the power cannot be inadvertently energized.

⚠ WARNING

SAFETY AND ELECTRICAL HAZARD!

Failure to follow this Warning could result in property damage, severe personal injury, or death.

These servicing instructions are for use by qualified personnel only. To reduce the risk of electrical shock, do not perform any servicing other than that contained in these operating instructions unless you are qualified to do so.

⚠ CAUTION

GROUNDING REQUIRED!

Failure to inspect or use proper service tools may result in equipment damage or personal injury.

Reconnect all grounding devices. All parts of this product that are capable of conducting electrical current are grounded. If grounding wires, screws, straps, clips, nuts, or washers used to complete a path to ground are removed for service, they must be returned to their original position and properly fastened.

⚠ WARNING

UNIT CONTAINS R-410A REFRIGERANT!

Failure to use proper service tools may result in equipment damage or personal injury.

R-410A operating pressure exceeds the limit of R-22. Proper service equipment is required. Service using only R-410A Refrigerant and approved POE compressor oil.

⚠ WARNING

SAFETY HAZARD!

Operating the unit without the access panels properly installed may result in severe personal injury or death.

Do not operate the unit without the evaporator fan access panel or evaporator coil access panel in place.

⚠ WARNING

WARNING!

This product can expose you to chemicals including lead, which are known to the State of California to cause cancer and birth defects or other reproductive harm. For more information go to www.P65Warnings.ca.gov.

Important: *Wear appropriate gloves, arm sleeve protectors and eye protection when servicing or maintaining this equipment.*

Important: *Air filters and media wheels or plates shall meet the test requirements in UL 900.*

©2020

Product Specifications

MODEL	4WHC4024A1000B
RATED Volts/PH/Hz	208–230/1/60
Performance Cooling BTUH [a]	24800
Indoor Airflow (CFM)	830
Power Input (KW)	1.79
EER/SEER (BTU/Watt-Hr.) [b]	13.6 / 16.0
Sound Power Rating [dB(A)] [c]	74
Performance (Heating)	
(High Temp.) BTUH — C.O.P.	21200 — 3.79
Power Input (KW)	1.73
(Low Temp.) BTUH — C.O.P.	11700 — 2.10
Power Input (KW)	1.64
HSPF (BTU / Watt-Hr.)	8.2
POWER CONN. V/Ph/Hz	208–230/1/60
Min. Brch. Cir. Ampacity [d]	18.7
Fuse Size — Max. (amps)	25
Fuse Size — Recmd. (amps)	25
COMPRESSOR	SCROLL
No. Used — No. Speeds	1 — 1
Volts/Ph/Hz	208–230/1/60
R.L. Amps — L.R. Amps	10.9 / 63
OUTDOOR COIL — TYPE	PLATE FIN
Rows/F.P.I	2 / 22
Face Area (sq. ft.)	11.2
Tube Size (in.)	3/8
Refrigerant Control	TXV—NB
INDOOR COIL — TYPE	PLATE FIN
Rows/F.P.I	4 / 12
Face Area (sq. ft.)	3.44
Tube Size (in.)	3/8
Refrigeration Control	TXV—NB
Drain Conn. Size (in.)	3/4 FEMALE PVC
Duct Connections	SEE OUTLINE DRAWING

OUTDOOR FAN — TYPE	PROPELLER
No. Used/Dia. (in)	1 / 20
Type Drive/No. Speeds	DIRECT / 1
CFM @ 0.0 in. w.g. [e]	2500
No. Motors — HP/RPM	1 / 1/5 / 850
Volts/Ph/Hz	208–230/1/60
F.L. Amps/L.R Amps	1.0 — 2.2
INDOOR FAN — TYPE	CENTRIFUGAL
Dia. x Width (in.)	10 X 10
No. Used	1
Drive / Type / Speeds (No.)	DIRECT / CTM / 2
CFM @ 0.0 in. w.g. [f]	SEE FAN PERF TABLE
Motor — HP/R.P.M.	1/ 0.5 / 1050
Volts/Ph/Hz	208–230/1/60
F.L. Amps	4.1
FILTER / FURNISHED	NO
Type Recommended	THROWAWAY
Recmd. Face Area (sq. ft) [g]	2.67
REFRIGERANT	R-410
Charge (lbs.)	7.5
Subcooling	6° F
DIMENSIONS	H X D X W
Crated (in.)	36 X 33–13/16 X 48
WEIGHT	
Shipping (lbs.) / Net (lbs.)	322 / 275

[a] Rated in accordance with AHRI Standard 210/240.
[b] Rated in accordance with D.O.E. test procedure.
[c] Sound Power values are not adjusted for AHRI 270–95 tonal corrections.
[d] Calculated in accordance with currently prevailing Nat'l Electrical Code.
[e] Standard Air — Dry Coil — Outdoor.
[f] Standard Air — Dry Coil — Indoor
[g] Filters must be installed in return air stream. Square footages listed are based on 300 f.p.m. face velocity. If permanent filters are used size per manufacturer's recommendation with a clean resistance of 0.05" W.C.

Outline Drawing

Figure 1. Dimensional Drawing

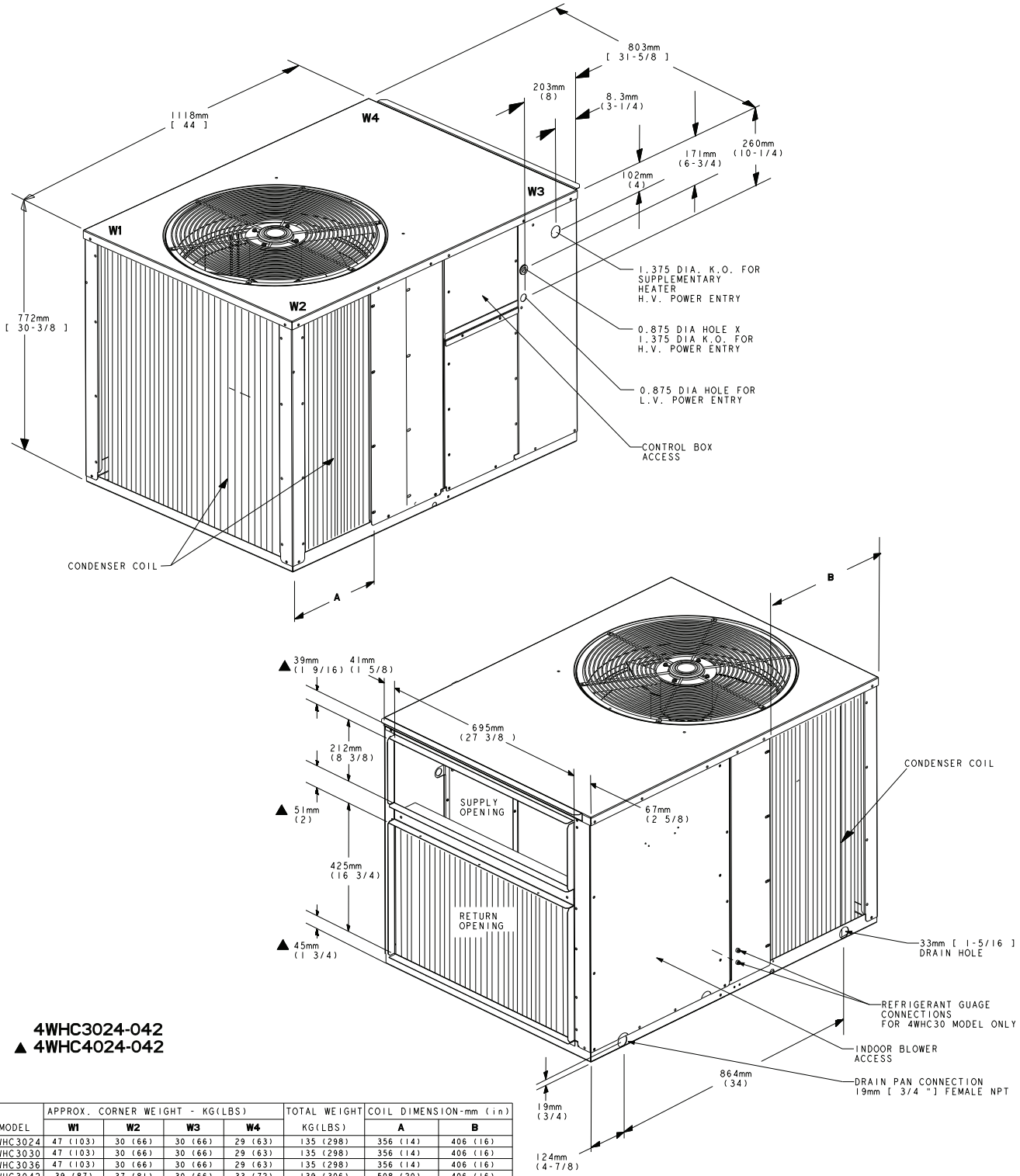

4WHC3024-042
▲ 4WHC4024-042

MODEL	APPROX. CORNER WEIGHT - KG(LBS)				TOTAL WEIGHT	COIL DIMENSION-mm (in)	
	W1	W2	W3	W4	KG(LBS)	A	B
4WHC3024	47 (103)	30 (66)	30 (66)	29 (63)	135 (298)	356 (14)	406 (16)
4WHC3030	47 (103)	30 (66)	30 (66)	29 (63)	135 (298)	356 (14)	406 (16)
4WHC3036	47 (103)	30 (66)	30 (66)	29 (63)	135 (298)	356 (14)	406 (16)
4WHC3042	39 (87)	37 (81)	30 (66)	33 (72)	139 (306)	508 (20)	406 (16)
▲ 4WHC4024	35 (78)	33 (73)	27 (59)	30 (65)	125 (275)	356 (14)	406 (16)
▲ 4WHC4030	35 (78)	33 (73)	27 (59)	30 (65)	125 (275)	356 (14)	406 (16)
▲ 4WHC4036	35 (78)	33 (73)	27 (59)	30 (65)	125 (275)	356 (14)	406 (16)
▲ 4WHC4042	39 (87)	37 (81)	30 (66)	33 (72)	139 (306)	508 (20)	406 (16)

Indoor Fan Performance

4WHC4024A1		EXTERNAL STATIC PRESSURE (IN. WG)			
MOTOR SPEED		0.2	0.3	0.4	0.5
LOW [a]	WATTS	145	152	160	168
	CFM	880	844	800	757
HIGH	WATTS	192	199	212	226
	CFM	985	943	906	867
WET COIL, NO FILTERS					

[a] FACTORY SETTING

Pressure Drop Table

	Number of Racks		
Airflow CFM	1	2	3
	Air Pressure Drop (Inches of w.g.)		
600	0.02	0.04	0.06
700	0.03	0.05	0.07
800	0.03	0.06	0.09
900	0.04	0.08	0.12
1000	0.05	0.10	0.15
1100	0.06	0.12	0.18
1200	0.07	0.14	0.21
1300	0.08	0.17	0.25
1400	0.10	0.20	0.30
1500	0.12	0.23	0.35

Heater Model	No. of Racks
BAYHTRC106A	1
BAYHTRC111A	1

Mechanical Specifications

General

All units are factory assembled, piped, internally wired and fully charged with R-410A. Units are certified to UL Standard 1995. All units are factory run-tested to check cooling and heating operation, defrost operation, fan and blower rotation and control sequence. Units shall be designed to operate at ambient temperatures as high as 115°F. Cooling and heating performances are rated in accordance with AHRI standards. Units are designed for either rooftop or ground level installation. All units shall be dedicated horizontal airflow and are not convertible.

Unit Casing

All components are mounted in a weather-resistant steel cabinet with a baked-on enamel finish. Access panels are provided for unit controls, indoor coil and supply air fan. Top covers shall be removable for access or installation of electric heaters and outdoor fan and compressor. Indoor air section is completely insulated with fireproof, permanent, odorless glass fiber material. Knockouts are provided for utility and control connections. Drain connections are provided to accommodate indoor coil water runoff.

Compressor

Hermetically sealed, high efficiency compressor designed for heat pump duty. Internal over current and over temperature protection, low pressure protection.

Refrigerant Circuit

All units have thermostatic expansion valve refrigerant control for heating and cooling operation. Service pressure tap ports, check valves, solenoid-operated reversing valve, and refrigerant line filter driers are standard.

Indoor and Outdoor Coil

Indoor and outdoor coils are constructed of aluminum plate fins mechanically bonded to 0.375 inch seamless copper tubing.

Outdoor Fan

One, direct-drive, statically and dynamically balanced propeller fan is used in a top discharge configuration. Permanently lubricated weatherproof motors have built-in thermal overload protection.

Indoor Fan

Forward-curved, centrifugal-type fan with multispeed, Direct-drive Constant Torque Motor on 2 — 3 ton models and a Direct-drive Variable Speed Motor on 3 1/2 ton models. Permanently lubricated with built-in overload protection.

Demand Defrost Control

Microcomputer logic is used to sense the need for defrost and permits defrost cycles only when coil icing conditions begin to cause serious heat pump capacity reductions.

Accessories

Supplemental Electric Heater-Heater module shall mount in unit discharge air passage. Each heater assembly includes automatically resetting heat limit switches for thermal protection. A polarized plug provides connection to unit low voltage control wiring.

Indoor Thermostat

Two-stage heating, one-stage cooling thermostat is available in either manual or automatic changeover. Thermostat provides automatic or continuous fan operation and includes outdoor thermistor, emergency heat switch with indicator light, and auxiliary heat indicator light.

Low Ambient Control Kit

Provides low ambient cooling operation to 0°F

About Trane and American Standard Heating and Air Conditioning

Trane and American Standard create comfortable, energy efficient indoor environments for residential applications. For more information, please visit www.trane.com or www.americanstandardair.com.

The AHRI Certified mark indicates company participation in the AHRI Certification program. For verification of individual certified products, go to ahridirectory.org.

The manufacturer has a policy of continuous data improvement and it reserves the right to change design and specifications without notice. We are committed to using environmentally conscious print practices.

4WHC4024A-SUB-1D-EN 01 Jun 2020
Supersedes 4WHC4024A-SUB-1C-EN (April 2017)

©2020